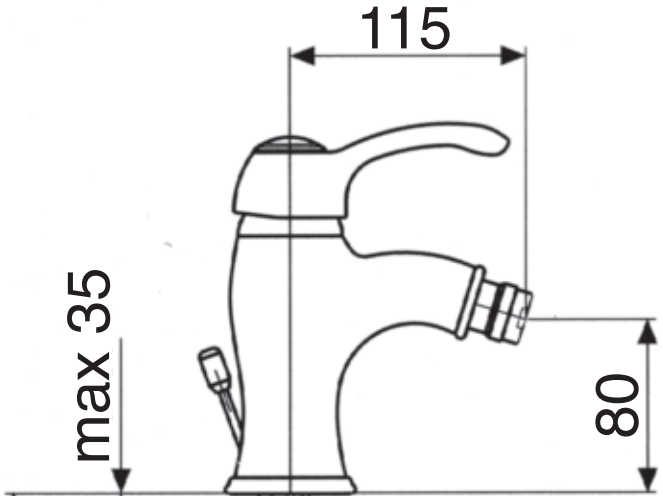

TR 30 - TORNADO