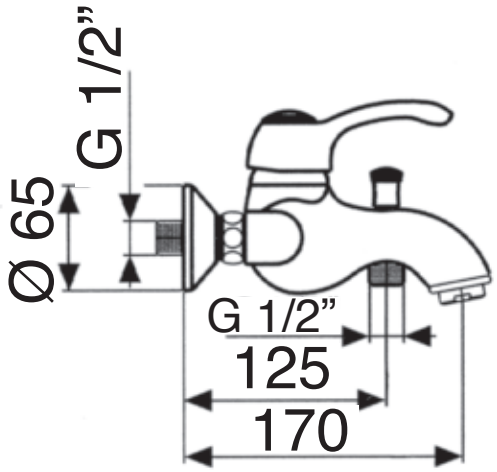

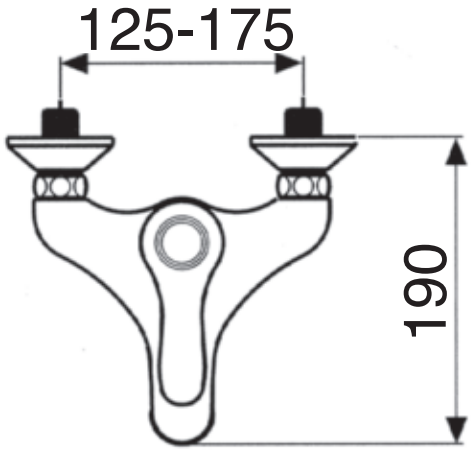

TR 10 - TORNADO