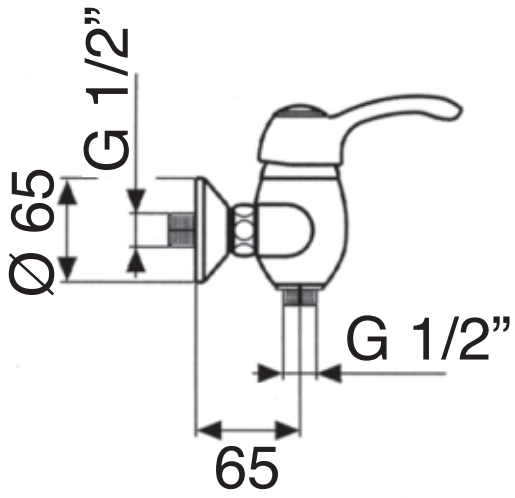

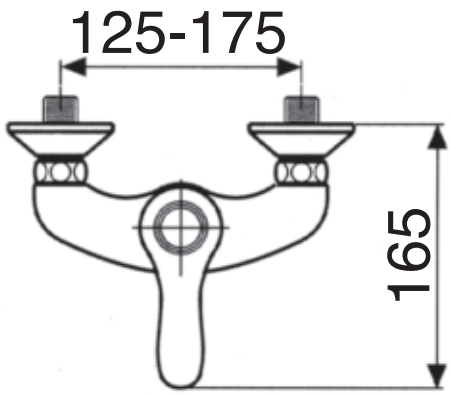

TR 50 - TORNADO