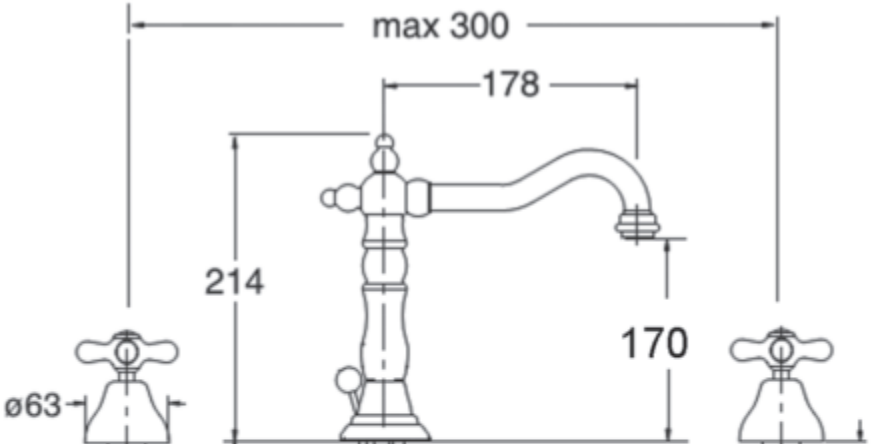

KS 20 BA - KISS